Manual# 1100641

Installation Manual

Marine Pro.

SDU 410

Safety Shutdown Unit

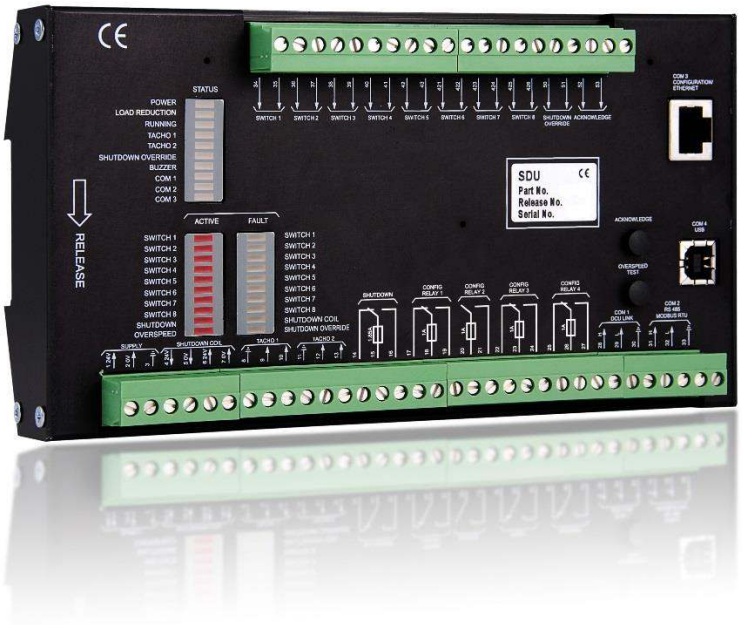

auto MASKIN

Installation Manual

for

SDU 410

~~~

Safety Shutdown Unit

Revision 1.0

Revised August 31, 2017

Revision history:

Rev.	Date	Description
1.0	31.09.2017	Initial Release Revision (Upgraded from former QIG ver. 1.2)
~~~

Marine Pro.

Table of Content

Document Information

About this manual

This manual has been published primarily for professionals and qualified personnel.

The user of this material is assumed to have basic knowledge in marine systems, and must be able to carry out related electrical work.

Warning!

Work on the low-voltage circuit should only be carried out by qualified and experienced personnel.

Installation or work on the shore power equipment *must only* be carried out by electricians authorized to work with such installations.

Responsibilities

Warning!

It is the *sole responsibility of the installer* to ensure that the installation work is carried out in a satisfactorily manner, that it is operationally in good order, that the approved material and accessories are used and that the installation meet all applicable rules and regulations.

Note! Auto-Maskin continuously upgrades its products and reserves the right to make changes and improvements without prior notice.

For updated information, please contact the local distributor.

Ordering information

The **Marine Pro** covers a wide range of compatible products within both the **200-** and **400 Series.** Please visit our web site for more information.

http://auto-maskin.com/marine/

System Overview

The figure below shows a simple layout with the SDU included for one engine.

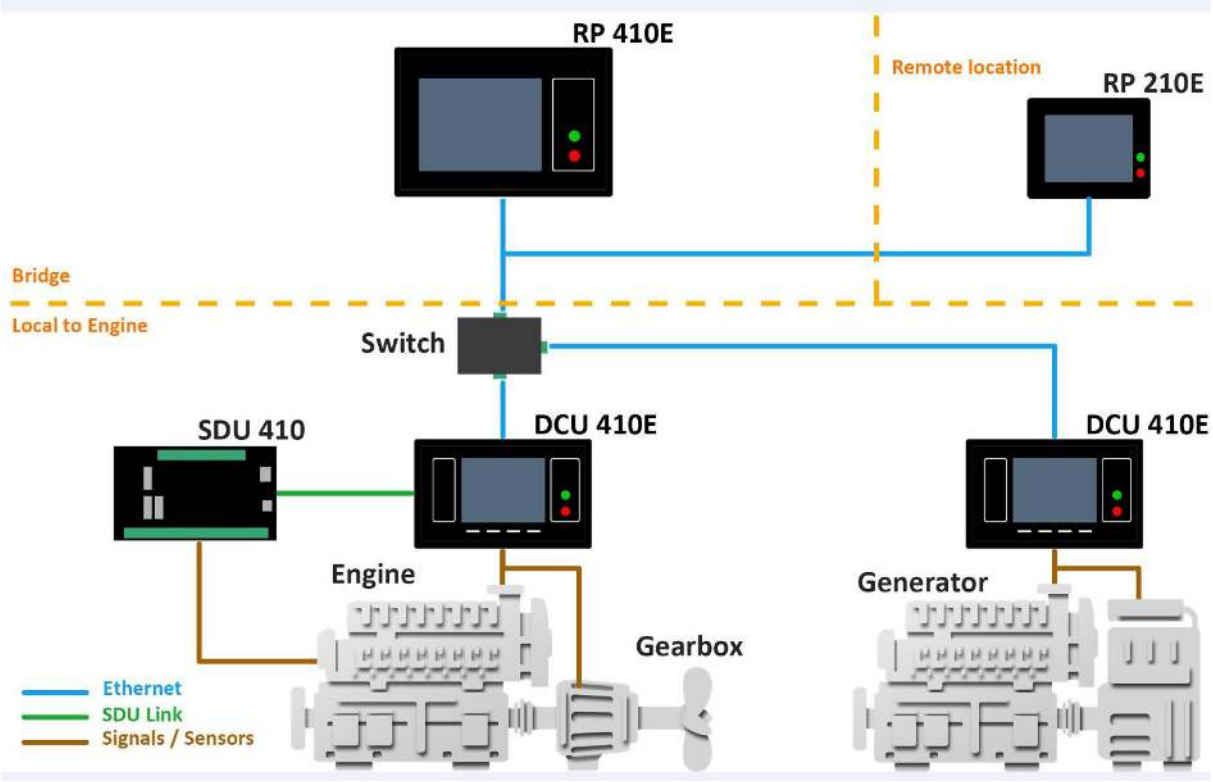

DCU Engine Control Unit

A DCU 410/210 (E or Classic) engine controller unit is the main building block in a Marine Pro System. Engine sensor values are displayed on the color screen, and commands and other user interaction is also available from here.

RP Remote Panel

The optional RP 410/210 (E or Classic) remote panel brings the DCU display to a remote location with no need for any configuration.

Ethernet Switch

Our recommendation is to include an Ethernet switch always. Even if it is possible to use a cable only for simple installations with one DCU and one RP. PC connection for configuration and setup is also more convenient with the Ethernet switch available.

Expansion

The system can be expanded with more input and output channels using different RIO (Remote I/O) units.

Installation

This chapter covers the installation of the SDU 410.

General

The SDU 410 is an engine safety module.

It is primarily designed to be used together with the Marine Pro 400 Series, but it can also be used standalone.

It can be installed separate from the DCU or in the same cabinet.

The engine shutdown switches shall be wired to the switch input channels on the SDU 410.

The two-wire *SDU Link* shall be established between the DCU and the SDU.

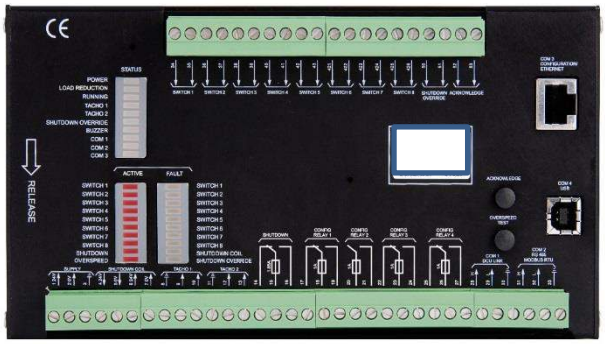

LED Overview

There are three groups of LEDs:

- Status (green LEDs)
- Shutdown (red LEDs)
- Fault (amber LEDs)

Status LEDs

Green LEDs with SDU status.

LED	Description
Power	Lit when power supply is OK. Flashing when below 23V.
Load Reduction	Lit when SDU is in load reduction mode.
Running	Lit when SDU senses the engine is running.
Tacho 1	Lit when SDU senses engine speed above 5 rpm.
Tacho 2	Lit when SDU senses engine speed above 5 rpm.
Shutdown Override	The Shutdown Override input is active.
Buzzer	The Buzzer relay output is active.
COM 1	LED flashes when there is communication on the DCU link.
COM 2	LED flashes when there is communication on the Modbus port.
COM 3	LED flashes when there is communication on the Ethernet port.

Active LEDs

Red LEDs with switch channel and load reduction/shutdown status.

LED	Description
Switch 1-8	Lit if there is a load reduction/shutdown on the respective channel.
Shutdown	Lit if the SDU has activated load reduction/shutdown.
Overspeed	Lit if the SDU detected engine overspeed.

Fault LEDs

Amber LEDs with switch channel and shutdown fault status.

LED	Description
Switch 1–8	Flashing (lit when acknowledged) if the SDU detected a fault on the respective channel. The channel is disabled. All switch channels require a 10k loop detection resistor across the switch.
Shutdown Coil	Flashing (lit when acknowledged) if the SDU detected a fault on the channel. The connected relay coil impedance must be in the range 300 to 700 ohms.
Shutdown Override	Broken loop, or a short to 0V or 24V, is detected on the Shutdown Override input. Connect a 10k resistor for loop detection.

Relays

One relay is dedicated to Shutdown. The other 4 relays can be configured to the following functions.

Function	Description
Crank Cutoff	Activated in crank cutoff.
Buzzer	Activated when the buzzer is active.
Fault	Inverted – activated when no fault.
Running	Activated when in running state.
Shutdown	Activated in shutdown mode.
Overspeed Shutdown	Activated when overspeed shutdown.
Overspeed Test Mode	Activated in overspeed test mode.
Shutdown Override #1	Activated in shutdown override mode.
Shutdown Override #2	Activated in secondary shutdown override.
Load Reduction	Activated in load reduction mode.
Delayed Shutdown Imminent	Activated when shutdown is imminent.

Wiring

Follow these wiring guidelines.

24VDC Supply

Connect 24VDC (positive) to terminal 1 and 0V (negative) to terminal 2.
Connect Shield/Ground to terminal 3.

Wire Requirement

SDU supply wires shall have a minimum area of 1.0 mm^2.

Switch Channels

All switch channels use a two-wire layout, where both wires from the switch are to be routed to the SDU.

Wire Requirement

Switch wires shall have a minimum area of 0.5 mm^2.

Loop Detection

Each switch input shall add a 10k resistor connected across.

Note! The 10k resistor shall be connected directly *at the switch*, and not at the SDU 410.

Switches shall be normally open (NO), and shall close to indicate engine shutdown.

Pickup Channels

The SDU can operate with one or two magnetic pickup sources.

One channel is required. Some societies require the use of two channels.

Pickup 1

Connect one pickup to terminals 9 and 10, with shield to terminal 8.

Pickup 2

Connect an additional pickup to terminals 12 and 13, with shield to terminal 11.

Note! Make sure the cable shield is connected at the SDU side and not at the pickup side.

Shutdown Coil

Connect a separate 24V supply to terminals 6 and 7.

The supply must be powerful enough to supply the shutdown coil connected to terminals 4 and 5.

Shutdown Override

This is to be wired exactly like a Switch Input, that is; it shall be a normally open switch.

Close the switch to activate Shutdown Override.

Note! Make sure a 10k resistor is connected across the switch.

DCU Communication

Depending on the DCU model connect the wires in the shielded communication cable to the terminals as shown in the table below:

SDU 410	DCU 410(E)/ 408	DCU 210E/ 208E	DCU 210/ 208
30 (⏚)	60 (⏚)		22 (⏚)
29 (L)	61 (L)	5 (L)	23 (L)
28 (H)	62 (H)	6 (H)	24 (H)

Note! Do not connect the cable shield (⏚) at both ends.

To minimize the effect of external noise it is recommended to use twisted pair wires.

Note! The SDU Link shall be terminated with a 120 ohm resistor at the end of the communication link. Note that the DCU is already terminated internally.

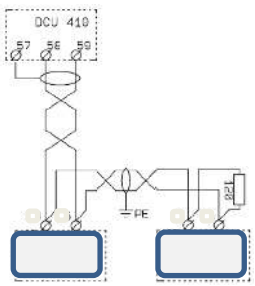

If there are several units attached to the link add the 120 Ohm resistor together with the last unit on the bus.

Connections

The two-wire *SDU Link* has fixed communication parameters.

The Baud rate is 19200 baud.

- 8 data bits
- 1 stop bit
- Even parity

When properly connected, the DCU will find the SDU automatically. To start using the SDU, enable it via the DCU web interface.

Configuration Mismatch Warning

When the SDU is connected to the DCU, the DCU will analyze the configuration in the SDU and compare it to the stored configuration in the DCU. If these do not match, the DCU will give a “Configuration Mismatch” warning.

The warning can be acknowledged, but DCU login rights are required to reset this warning. With login rights, the configuration can be copied from the DCU to the SDU, or vice versa. Please see the relevant Marine Pro manual for further details.

Buttons

Acknowledge

This button is used to acknowledge alarms and faults. See User’s Manual for more details.

Overspeed Test

Press and hold the “Overspeed Test” button for more than two seconds to enter the overspeed test mode. See User’s Manual for more details.

Configuration

The SDU 410 has eight switch input channels, and two magnetic pickup channels.

Factory default configuration

The SDU 410 comes with a predefined configuration from factory.

Often, the default configuration can be used as is. If for instance channels 3 and 4 are not to be used, then connect a 10k loop detection resistor across the wire terminals on the respective channel.

Without anything connected to an enabled channel the SDU will indicate with a channel fault.

Inactive channels

Channels 6-8 are disabled.

Loop detection

If a channel is active and shall not be used, then a 10k resistor *must* be connected across the wire terminals on that switch input channel.

Otherwise, the SDU will indicate with a fault on that channel.

Table explanation

The following is an explanation of the table header letters A-F.

A – Delay before Shutdown (sec)

This is the time from the switch close until the SDU activates the shutdown and stops the engine.

Channel	Description	Enabled	A	B	C	D	E	F
1	Coolant Temp	**Yes**	2	No	-	No	No	-
2	Coolant Pressure	**Yes**	2	No	15	No	Yes, 600	-
3	Lube Oil Pressure LSR	**Yes**	2	No	15	No	Yes, 600	-
4	Lube Oil Pressure HSR	**Yes**	2	No	15	No	Yes, 1400	-
5	Remote Engine Stop	**Yes**	2	No	-	Yes	No	-
6	Reserved #1	No	-	-	-	-	-	-
7	Reserved #2	No	-	-	-	-	-	-
8	Reserved #3	No	-	-	-	-	-	-
Overspeed	Engine Overspeed	**Yes**	0.1	-	-	-	-	1725

Active channels

Channels 1-5 are enabled and predefined according to the table above.

B – On RUN only (Yes/No)

If **Yes**, the SDU activates shutdown when the engine is running only.

The SDU see the engine as running when the engine speed is higher than the setpoint configured in the SDU

C – Disabled this long after RUN/RPM threshold (sec)

When the engine rpm reaches the running setpoint, this timer starts.

When the time has elapsed, the channel is enabled.

D – Still enabled in Shutdown Override

Activating the Shutdown Override input does not disable these channels.

E – RPM Enabled Dependent, threshold (rpm)

Engine speed need to be above this setpoint to enable the channel.

F – Overspeed Shutdown setpoint

If the engine speed is above this value – for longer time than the value in A – the SDU will shut down the engine.

Note!

The *engine running* setpoint is set to 500 rpm.

The *pulses/revolution* is set to 149.

The *Nominal/Rated* speed is set to 1500 rpm.

Configure SDU through the DCU

The easiest and preferred method of configuring the SDU is to login to the DCU engine panel web-server.

When logged in, enter the **SDU** section and configure the SDU.

Note! The configuration is stored in the DCU's current *active configuration file*, and is transferred to the SDU when it is connected.

- Connect an Ethernet cable between the PC and the DCU.
- In the browser, type the **IP address** of the **DCU**[1].

The **DCU** *default* IP address is **192.168.0.101**[2].

In the Welcome screen, select **SDU** from the left menu pane.

A login dialog similar to the one below will appear:

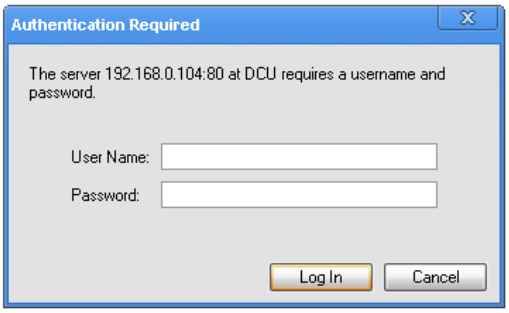

In the login dialog, type the **DCU** User Name and Password.

The factory default is

- User Name: **DCU**
- Password: **1234**

[1] To see the *actual* IP address in the DCU: In the DCU user interface, select Menu – Help – Version Information.

[2] In this example, we are logging in to a DCU with IP address = 192.168.0.104.

Then, the following shall appear:

Next, from the menu on the left, select the sub-section to be configured.

Press the **Submit** button after each configuration change.

For more configuration information, please consult the **Marine Pro** Installation Manual.

Configure SDU directly

This option should be selected only if the SDU is used standalone; without a DCU engine panel.

To configure the SDU directly, a login with administrator rights are required.

- Connect an Ethernet cable between the PC and the SDU.
- Set the PC to use a *static IP*, see the example below.
- Disable any active wireless communication on the PC.

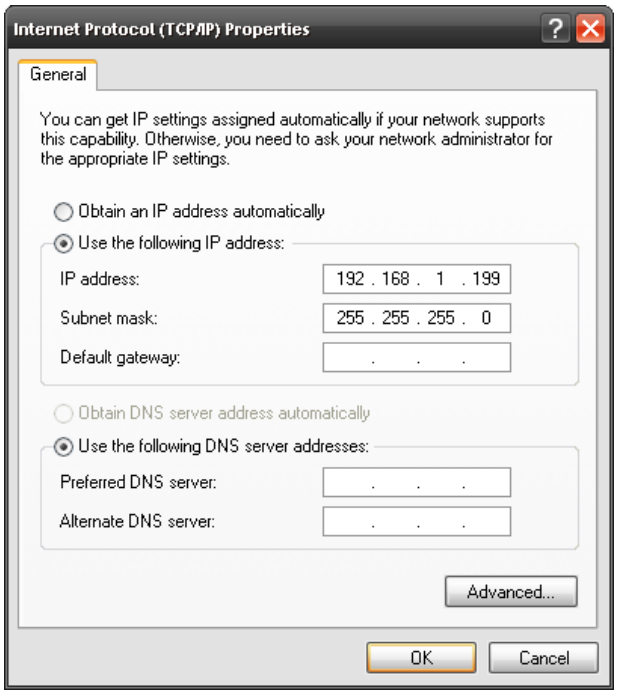

Then, in the internet browser, type the IP address of the SDU. The default SDU 410 IP address is **192.168.1.100**.

Note! An administrator can have changed the last digit to anything between 100 and 109. These are the only possible IP addresses on the SDU.

The **SDU login page** will then appear as below:

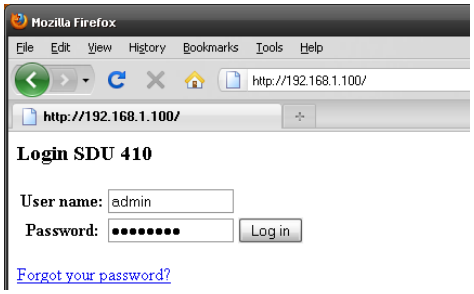

Type the administrator **SDU** User name and Password:

– User name: **admin**

– Password: **Password**

Note! Mind the upper- and lower case letters in the user name and password above.

The browser is now logged in to the SDU web-server directly.

Remember to press the **Save** button after each configuration change.

Status Miscellaneous

Here, the SDU lists miscellaneous status for power supply and certain internal status.

This is just an overview and no changes can be made here.

Status Channels

This page gives a status of the eight switch shutdown channels.

This is just an overview and no changes can be made here.

Pickup

This page has the configuration of each pickup channel.

Select **channel "1"** or **channel "2"**, then press **OK**.

Set the parameters for the channel, and then press **Save**.

Active

Check this to make the channel active.

Password Protection

Check this to protect the channel from any changes without admin rights.

Number of pulses/rev.

Set the pulses per engine revolution from the engine datasheet.

Running speed

The SDU detects the engine as running when above this rpm setpoint.

The Crank Cutoff and Running relay both activates when above this setpoint.

Normal speed

For auxiliary engines, set the normal engine operating speed.

For propulsion engines, set the maximum engine operating speed.

Overspeed

Set the engine overspeed setpoint.

Also set the time (in 1/10th sec) the engine is allowed above this setpoint before the SDU is activating engine shutdown.

Channels

This page has the configuration for each of the eight switch channels.

First, select a channel, and then press **OK**.

Set the parameters for the channel, and then press **Save**.

Event

Can be either Disabled, Shutdown, Load Reduction or Shutdown Override #2.

Password Protection

Check this to protect the channel from any changes without admin rights.

Delay before activation

Set the number of seconds until the channel is enabled after engine is detected running.

Delayed Shutdown

Set the number of seconds for a delayed shutdown.

Action on RUN only

Check this if the channel shall be enabled only when the engine is running.

This is typical for all pressure channels.

Initial delay

Set the number of seconds until engine shutdown after contact closure. If the contact opens while this timer is running, then the timer is reset.

Shutdown override inhibit

Check this if the channel shall always be enabled, also if Shutdown Override is selected.

This is typical for a manual E-stop button.

Shutdown override #2 inhibit

Check this is the channel load reduction/shutdown shall be ignored when secondary shutdown override is active.

Enable speed dependency

Check this to make the channel enable above a certain engine speed.

The actual engine speed is set in the Speed limit section next.

- If the engine speed is above the set value, then the channel is enabled.
- If the engine speed drops below the set value, then the channel is disabled.

Connections

Configure communication parameters.

IP address

Set the last figure of the IP address. Unless there is an IP address conflict this should be set to **100**.

Modbus 2 ID

Set the Modbus ID address for the COM 2 RS-485 Modbus communication port.

Baudrate

Set the Modbus baudrate, either 9600 or 19200 baud.

The fixed Modbus parameters are

- 8 databits
- 1 stopbit
- Even parity

Miscellaneous

Set miscellaneous configuration.

Buzzer Off

Check this to make the SDU buzzer silence automatically after five seconds.

Disable shutdown coil fault

Check this to disable the fault indication given by the SDU if no shutdown relay coil is connected on the SDU terminals 4 and 5.

Reset alarms

Click the **Reset** button to reset all alarms on the SDU.

This does the same as the physical **Acknowledge** button on the SDU.

Change password

Change the Administrator login password to secure the password protected channels.

If the password is lost, the SDU gives an encrypted password that can be unlocked. Contact the distributor for more details.

Changed configuration history

See the dates for the ten latest configuration changes.

Log out

Immediately logs out.

A new login is required to continue configuration.

About

See the firmware version the SDU is running.

Appendix A – Front

Front side and Connectors

Power Supply

Shutdown Coil

Tacho/MPU Input 1&2

Relays:

Shutown

Config Relay 1

Config Relay 2

Config Relay 3

Config Relay 4

COM1: DCU Link

COM2: Modbus RTU

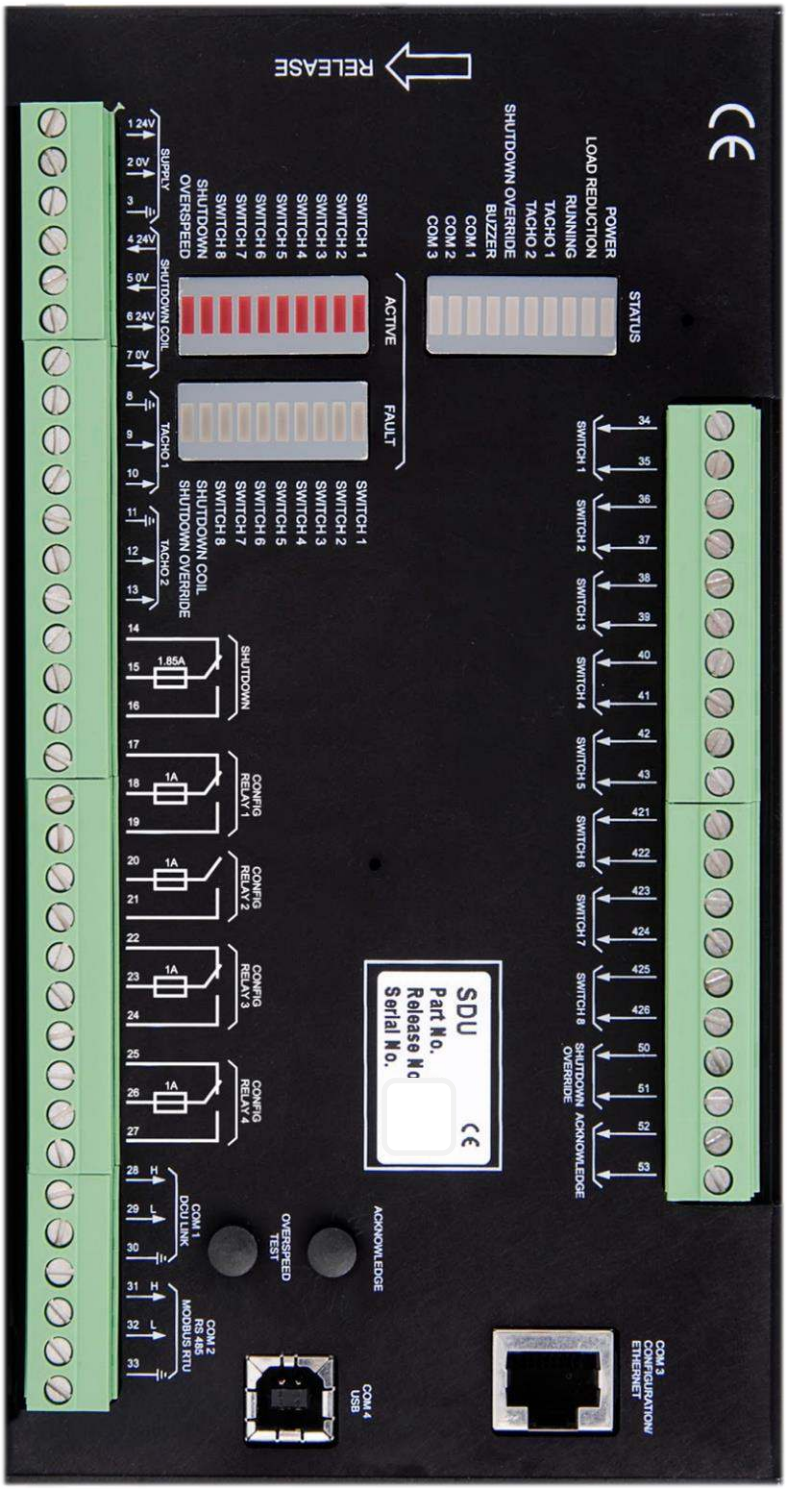

Inputs:

Switch 1

Switch 2

Switch 3

Switch 4

Switch 5

Switch 6

Switch 7

Switch 8

Shutdown Override

Acknowledge

COM 4: USB COM 3: Configuration/Ethernet